Poles - All steel to be A 36 Grade B or better.

Pole Paint- 1 Coat X- O Rust Primer
2 Coats X-O Rust , Enamel

Poles can be designed to be extended at later date.

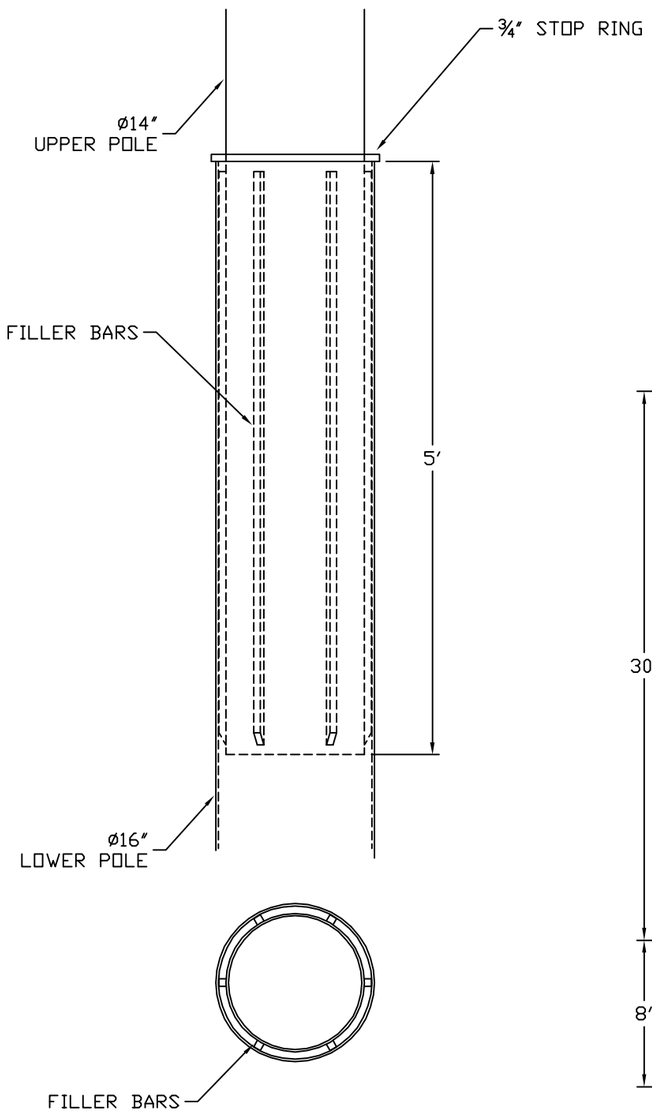

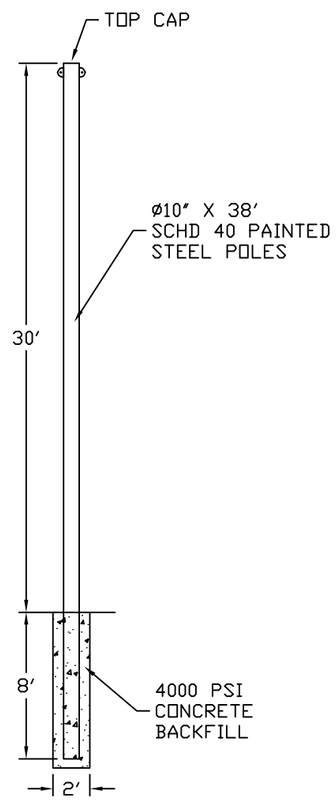

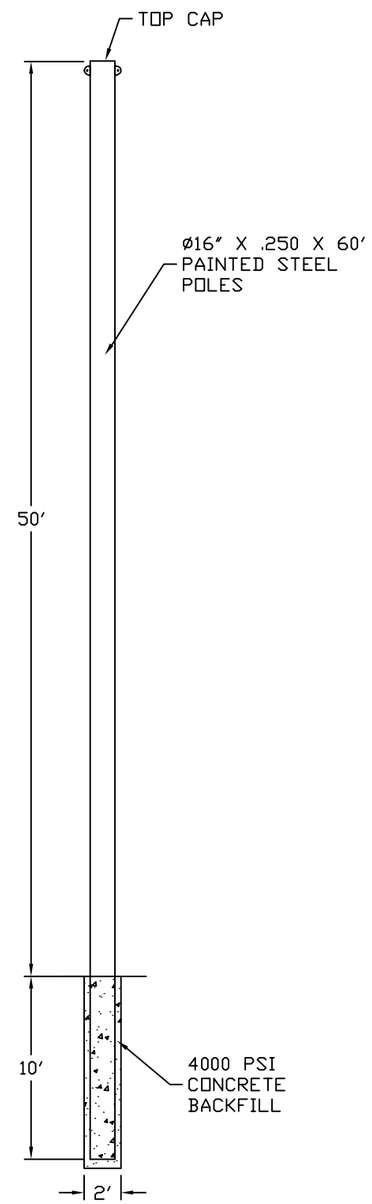

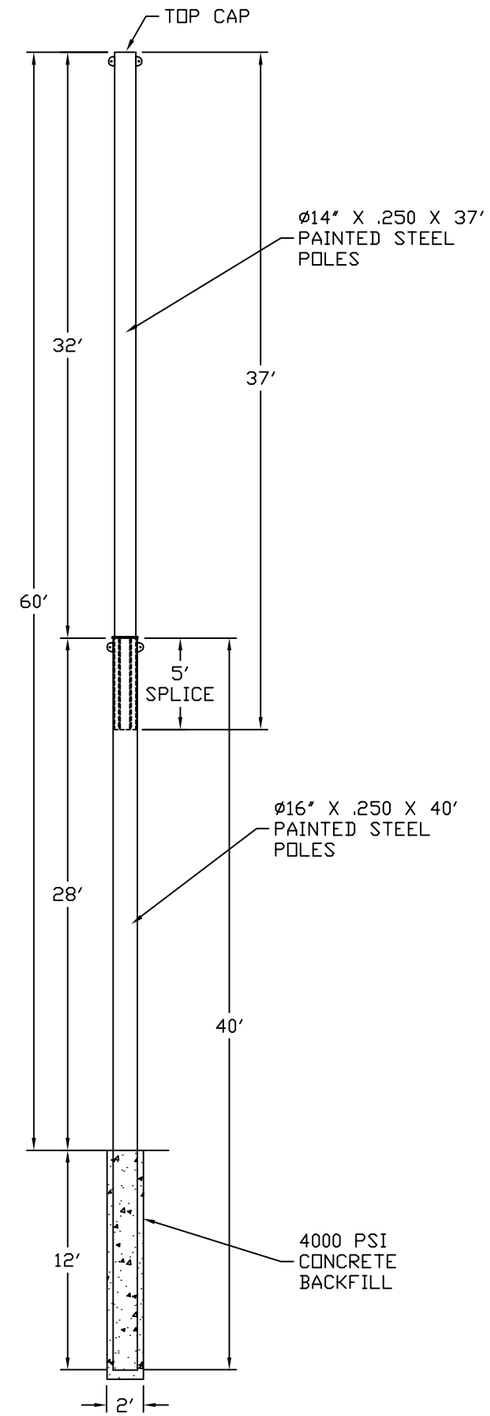

WCN
5075 Flightline Drive
Kingman, AZ. 86401
Office (928) 692-1144 Fax (928) 692+1501
Toll Free: (800) 854-5741
www.westcoastnetting.com

This structural system and details are proprietary and the exclusive product of WEST COAST NETTING, INC. No part of these drawings shall be reproduced, copied or used without the knowledge and written consent of WEST COAST NETTING, INC.

MARK	DATE	DESCRIPTION

PROJECT TITLE

SOFTBALL WEB

SHEET TITLE

TYPICAL SOFTBALL POLE DESIGN

DATE: 3-9-11

SCALE: – SIZE: D

DRAWN BY: RLN

PROJECT NO.

DRAWING NO.

-

SHEET 4 OF 6